ɔll No. | | | | | | | |

END Semester Examination 2024

Name of the Program: B.Tech **Semester: II**

Name of the Paper: Basic Electronics Engineering **Course Code: TEC-201**

Time: 3 Hours **Maximum Marks: 100**

Note:

- **(i) All questions are compulsory.**
- **(ii) Answer any two sub questions among a, b and c in each main question.**
- **(iii) Total marks in each main question are twenty.**
- **(iv) Each question carries 10 marks.**

Q1	**(10X2 = 20 marks)**	**CO**
(a)	Simplify the following using laws of Boolean algebra: (i) X+XY+X'Z (ii) (X+Y')(Y+Z') (X'+Z) (iii) A'B'C'+A'B'C+A'BC+AB'C'+AB'C+ABC	**CO1**
(b)	Simplify the following Boolean function using the K- map. Realize the simplified expressions using NAND gates only : (i) $f(A,B,C,D) = \Sigma m (0,1,3,4,5,10,14)$ (ii) $f(A,B,C,D) = \pi M (0,4,5,7,8,12,13,15)$	**CO1**
(c)	(i) Perform $(49)_{10} - (38)_{10}$ using 1's complement. (ii) Perform $(34)_8 - (17)_8$ using 2's complement.	**CO1**
Q2	**(10X2 = 20 marks)**	
(a)	Distinguish between insulators, semiconductors, and conductors on the basis of energy band theory. Explain mass action law for semiconductors.	**CO2**
(b)	In a P-type germanium, intrinsic carrier concentration $n_i = 2.1 \times 10^{19}\ m^{-3}$,density of Aluminium is 6×10^{25} atoms $/m^3$. The electron and hole mobility are 0.38 and 0.8 $m^2\ v^{-1}\ s^{-1}$ respectively. What is its conductivity before and after addition of Aluminium atoms ?	**CO2**
(c)	What do you mean by the Barrier Potential of a P-N junction diode? Discuss the biasing of a P-N junction diode.	**CO2**
Q3	**(10X2 = 20 marks)**	
(a)	Draw the circuit of a half wave rectifier and derive the expressions for average and r.m.s. values of load current for it.	**CO3**

(b)	In a center tapped full wave rectifier circuit having 2000 Ω load resistance and 10:1 transformer turn ratio, the primary is connected to 200 V, 50 Hz ac supply. Find (i) dc voltage across the load (ii) r.m.s value of load current (iii) rectification efficiency. Take forward resistance of both diodes equal to 12 Ω.	CO3
(c)	Draw a neat circuit diagram of a Zener diode based voltage regulator. Explain how it stabilizes the load voltage?	CO3
Q4	(10X2 = 20 marks)	
(a)	Draw the circuits and output characteristics of CB and CE configurations of BJT. Clearly highlight active, saturation, and cutoff regions on these characteristics.	CO4
(b)	What do you mean by leakage currents I_{CBO} and I_{CEO} of BJT . Derive the following expression. Here symbols have their usual meanings. $I_C = \beta I_B + (1+\beta) I_{CBO}$	CO4
(c)	For the following circuit, derive the expression for stability factor (S) in terms of R_B, R_C, and current gain β. Also plot the d.c. load line. 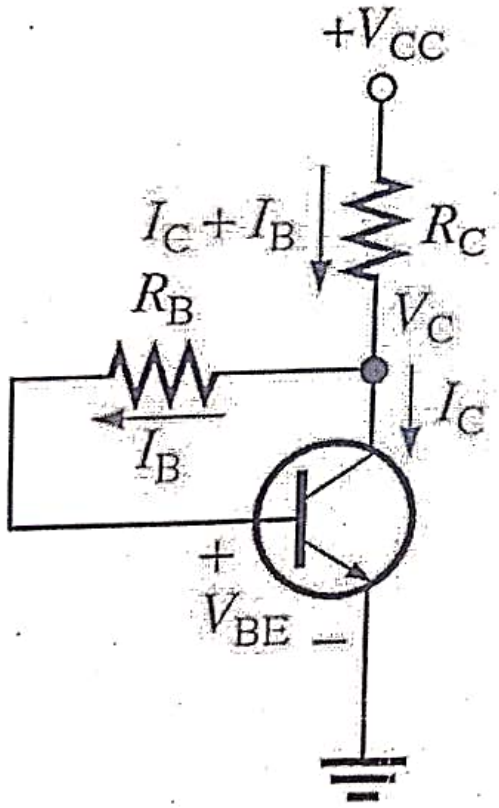 	CO4

Q5	(10X2 = 20 marks)	
(a)	Define open loop gain and CMRR of an OP-AMP. Write the characteristics of an ideal OP-AMP.	CO5
(b)	Draw the circuit of an integrator and derive the expression of output voltage for it.	CO5
(c)	For the following circuit, show that output voltage , $V_o = \frac{R_2}{R_1}(V_1 - V_2)$ 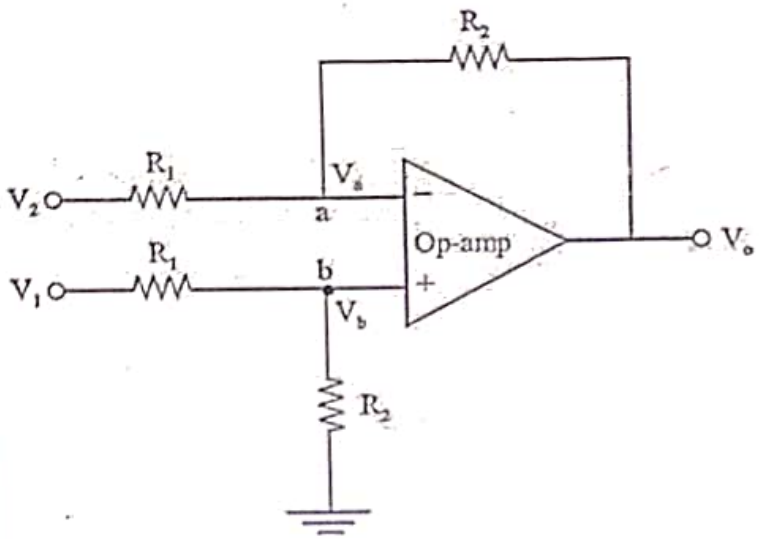 	CO5